Fast Thyristor Modules & Fast Diode Modules

MKC MHC

$I_{T(AV)}$	V_{DRM} V_{RRM}	I_{TSM}	I_{DRM} I_{RRM}	di/dt	dv/dt	I_{GT}	V_{GT}	I_H	V_{TO}	r_T	$R_{th(j-c)}$	Tq	T_j	Fig
A	V	Ax10	mA	A/μs	V/μs	mA	v	mA	V	mΩ	℃/ W	μs	℃	mm
160	600-1600	4.30	30	>200	>800	<150	<3	<150	0.86	1.66	0.14	15-35	115	G
200		5.60	30	>200		<200	<3	<200	0.90	1.17	0.10	15-35		H
300		7.80	40	>200		<200	<3	<200	0.88	0.80	0.07	15-35		I

MZC

$I_{T(AV)}$	V_{RRM}	I_{FSM}	I_{RRM}	V_{FO}	R_F	$R_{th(j-c)}$	Trr	T_j	Fig
A	V	$Ax10^3$	mA	V	mΩ	℃/ W	μs	℃	mm
160	600-1600	4.50	30	0.85	1.40	0.18	2.0	140	D
200		6.00	30	0.88	0.95	0.14	3.0		F
300		8.30	40	0.86	0.60	0.10	4.0		H

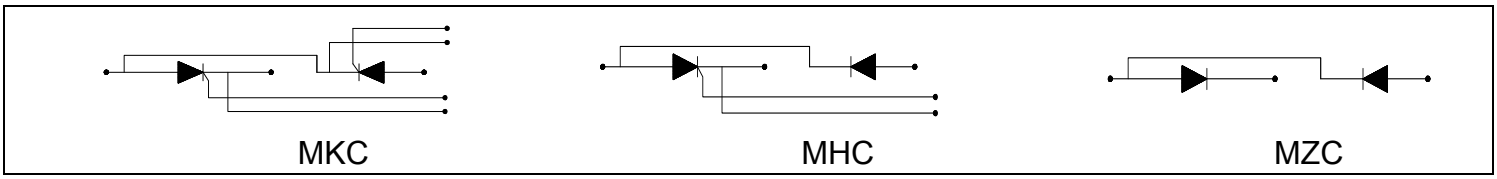

Note: MKC MHC @ Tc=85℃ MZC @Tc=100℃ V_{ISO} (AC)>2500V

Module Outline

A

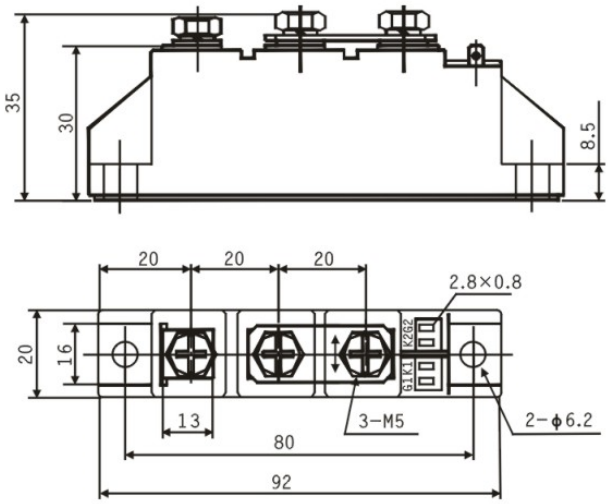

B

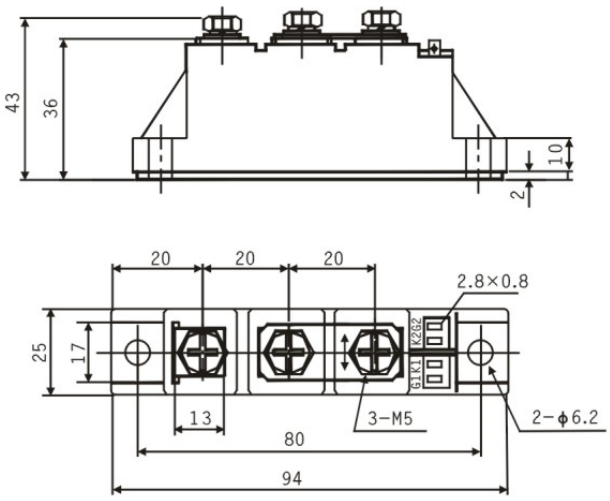

C

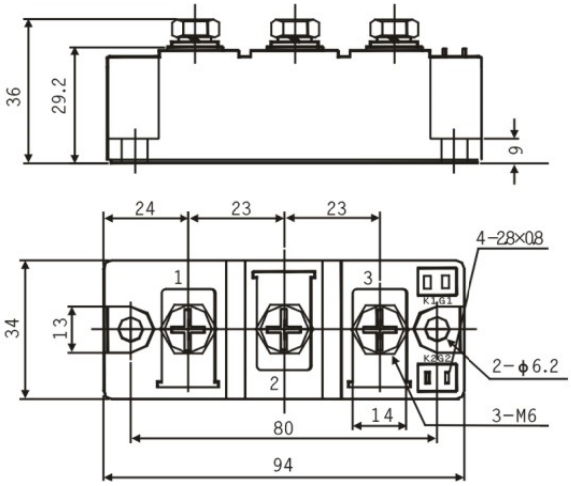
36
29.2
9
24
23
23
4-28×0.8
1
3
K1G1
34
13
K2G2
2-φ6.2
2
3-M6
80
14
94

D

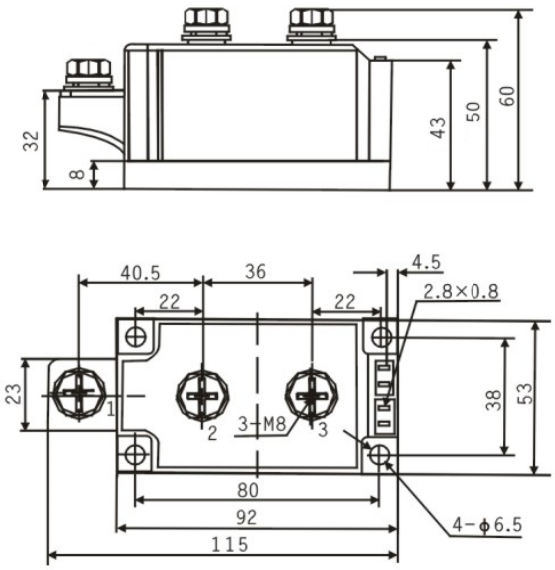
32
8
43
50
60
40.5
36
4.5
22
22
2.8×0.8
23
1
2
3-M8
3
38
53
80
92
115
4-φ6.5

E

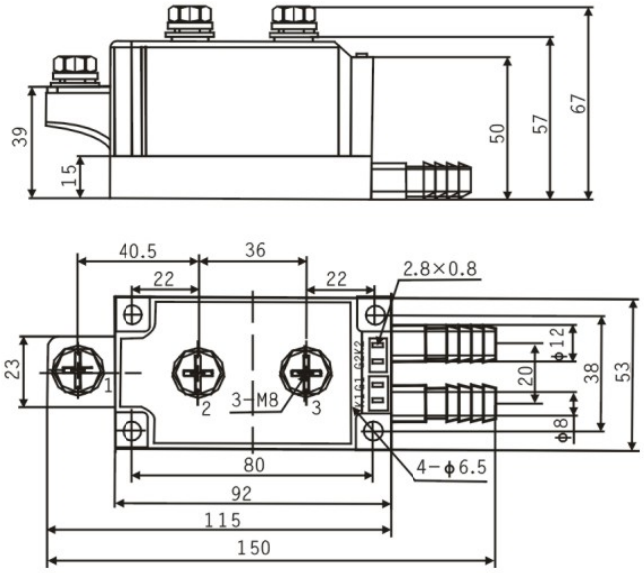
39
15
50
57
67
40.5
36
22
22
2.8×0.8
23
1
2
3-M8
3
K1G1
G2K2
φ12
20
38
53
φ8
80
92
115
150
4-φ6.5

F

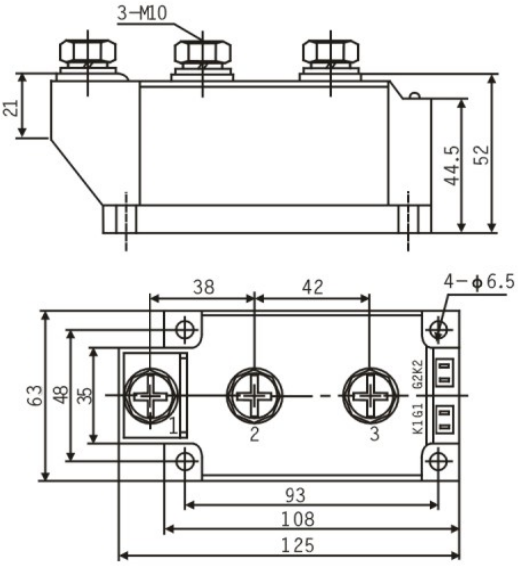
3-M10
21
44.5
52
38
42
4-φ6.5
63
48
35
1
2
3
K1G1
G2K2
93
108
125

G

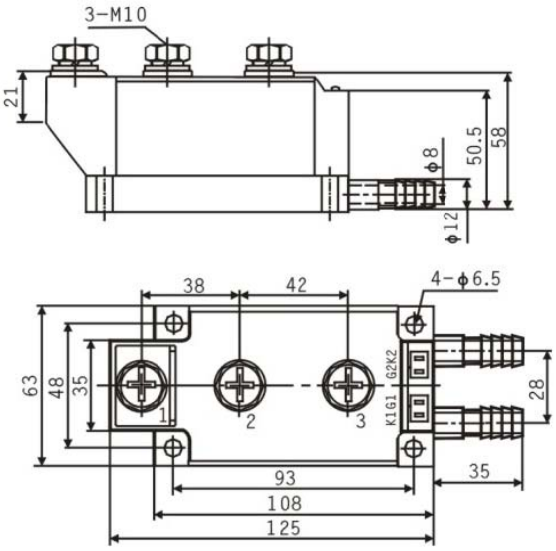
3-M10
21
φ8
50.5
58
φ12
38
42
4-φ6.5
63
48
35
1
2
3
K1G1
G2K2
28
35
93
108
125

H

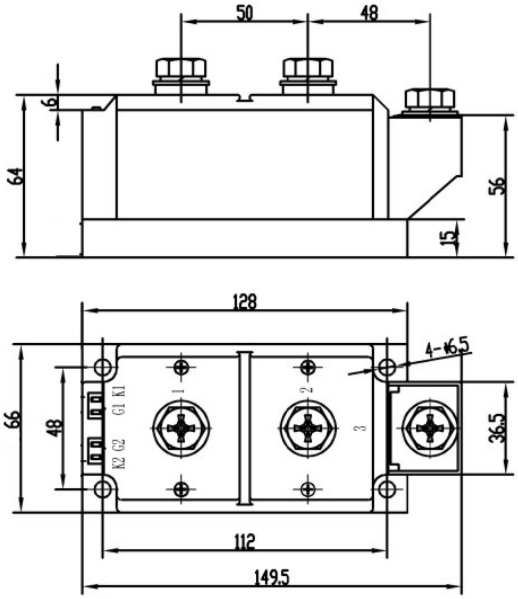
50
48
6
64
56
15
128
4-φ6.5
66
48
K1 G1
K2 G2
1
2
3
36.5
112
149.5

I

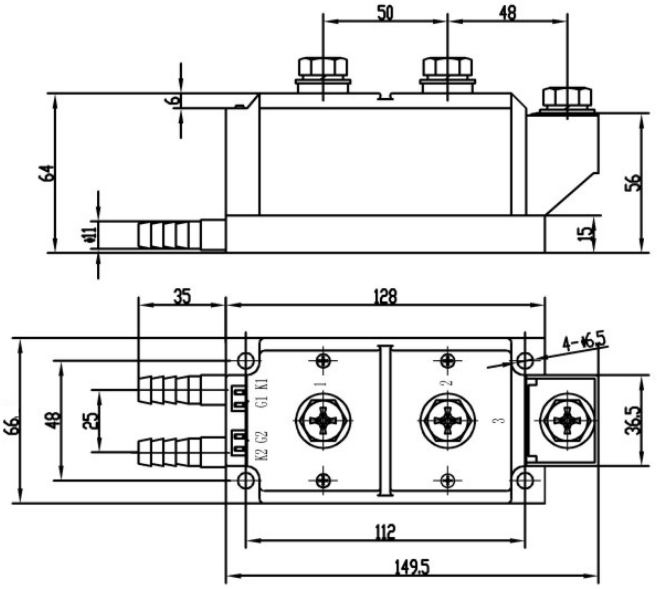
50
48
6
64
56
15
35
128
4-φ6.5
66
48
25
36.5
112
149.5

J

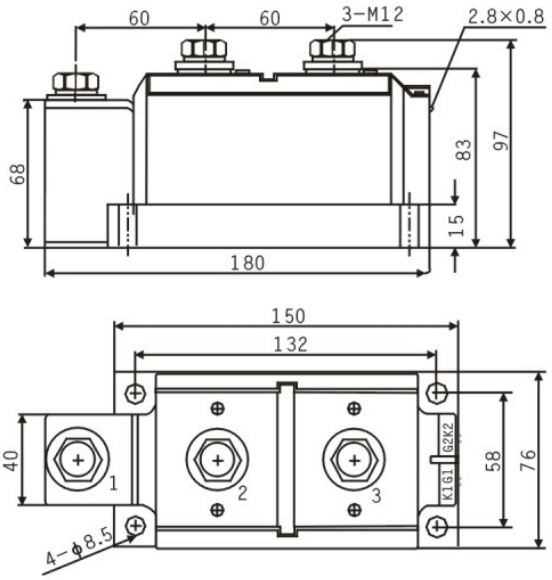
60
60
3-M12
2.8×0.8
68
83
97
15
180
150
132
40
58
76
4-φ8.5

K

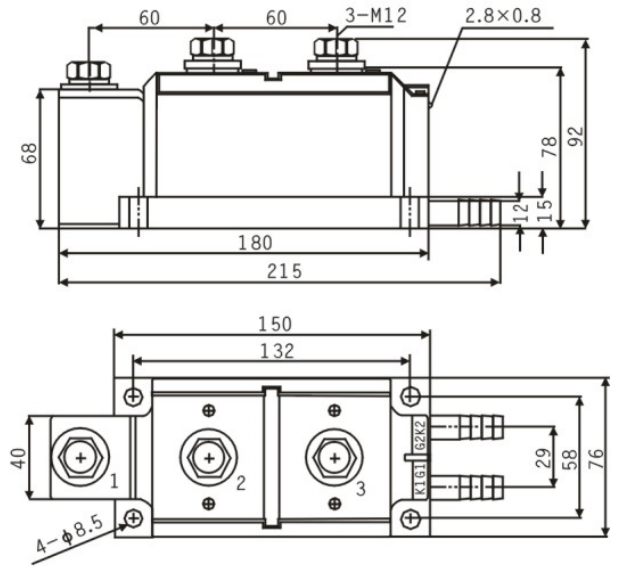
60
60
3-M12
2.8×0.8
68
78
92
12
15
180
215
150
132
40
29
58
76
4-φ8.5

L

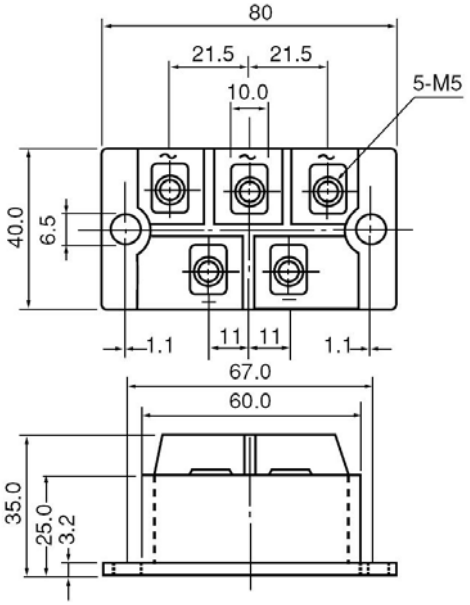
80
21.5
21.5
10.0
5-M5
40.0
6.5
1.1
11
11
1.1
67.0
60.0
35.0
25.0
3.2

M

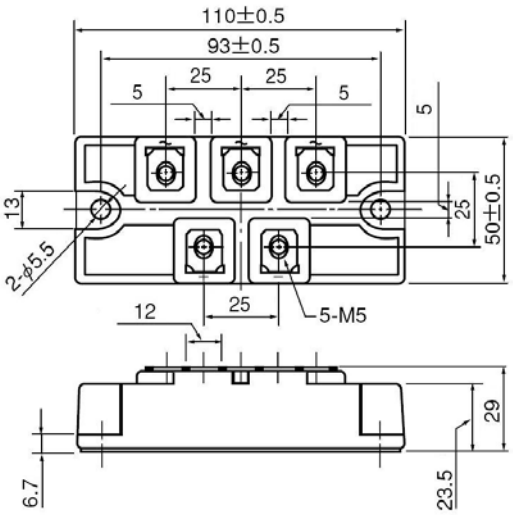
110±0.5
93±0.5
25
25
5
5
5
13
25
50±0.5
2-φ5.5
12
25
5-M5
29
6.7
23.5

N

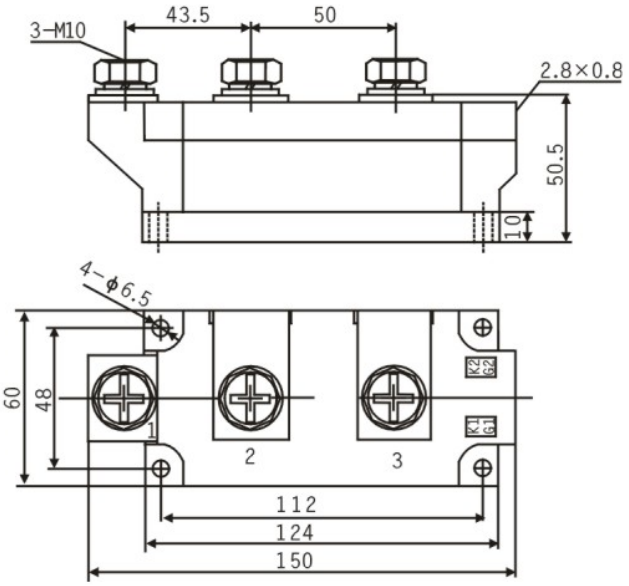
3-M10
43.5
50
2.8×0.8
50.5
10
4-φ6.5
60
48
112
124
150

List of Symbols	
V_{DRM}	Repetitive peak off-state voltage (50Hz,10ms)
V_{RRM}	Repetitive peak reverse voltage(50Hz,10ms)
I_{DRM}	Peak off-state current
I_{RRM}	Peak reverse recovery current
dv/dt	Critical rate of rise of off-state voltage
$I_{T(AV)}$	Mean on-state current
I_{TRMS}	RMS on-state current
I_{TSM}	Surge on-state current
I^2t	I^2t value
di/dt	Critical rate of rise of on-state current
V_{TM}	Peak on-state voltage
V_{TO}	Threshold voltage
I_{GT}	Gate trigger current
V_{GT}	Gate trigger voltage
I_H	Holding current
r_T	slope resistance
T_C	Case temperature
t_{rr}	Reverse recovery time
t_q	Circuit commutated turn-off time
T_j	Max. junction temperature
I_{TM}	Peak on-state current
$I_{F(AV)}$	Mean forward current
$I_{F(RMS)}$	RMS forward current
I_{FSM}	surge forward current
V_{FM}	Peak forward voltage
r_F	Forward slope resistance
I_{FM}	Peak forward current
F	Mounting force
V_{OV}	Overload current
I_o	Rated rectifiers current
V_D	Rated continuous(direct) output voltage